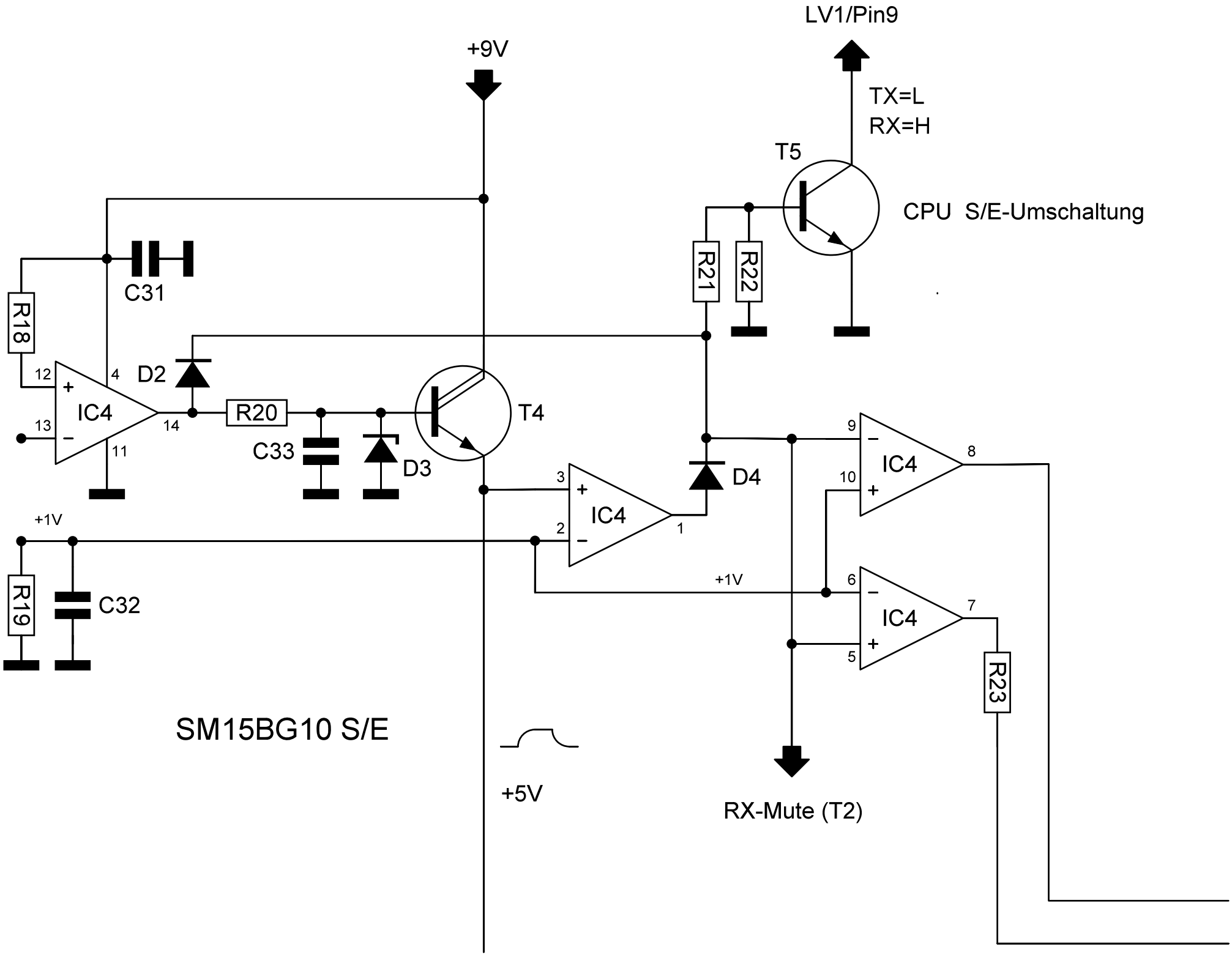
LV1/Pin9
+9V
TX=L
RX=H
T5
CPU S/E-Umschaltung
R21
R22
C31
R18
12
4
D2
+
IC4
13
14
R20
T4
C33
D3
11
–
3
+
IC4
2
–
1
D4
9
–
IC4
8
10
+
+1V
+1V
R19
C32
6
–
IC4
7
5
+
R23
SM15BG10 S/E
+5V
RX-Mute (T2)