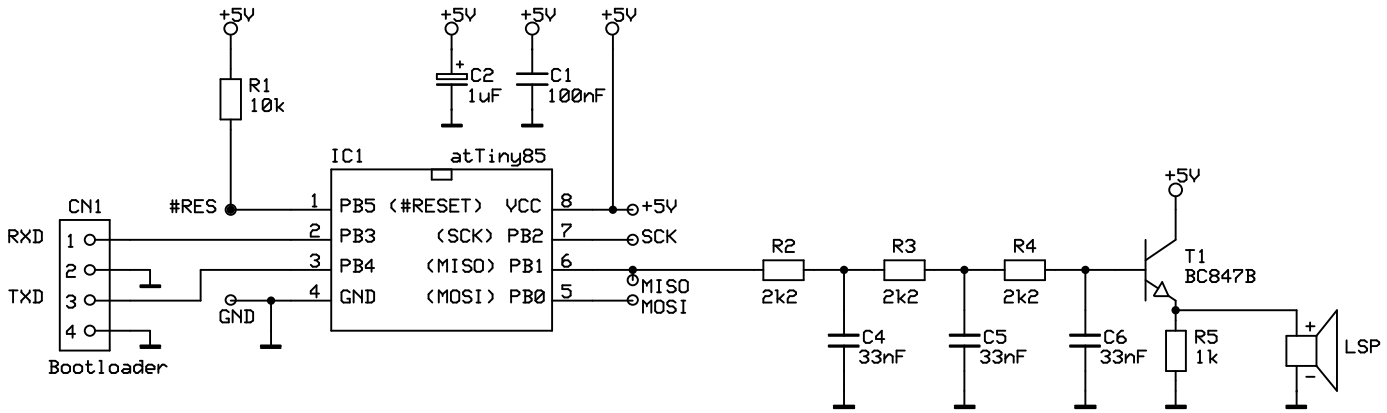

1750Hz Burst-Tongenerator		
DC5PI, Uwe		
	Rev 1.1	Page 1
	01.09.2015	